Wiring a Trailer Converter into ISIS

INTELLIGENT MULTIPLEX SYSTEM

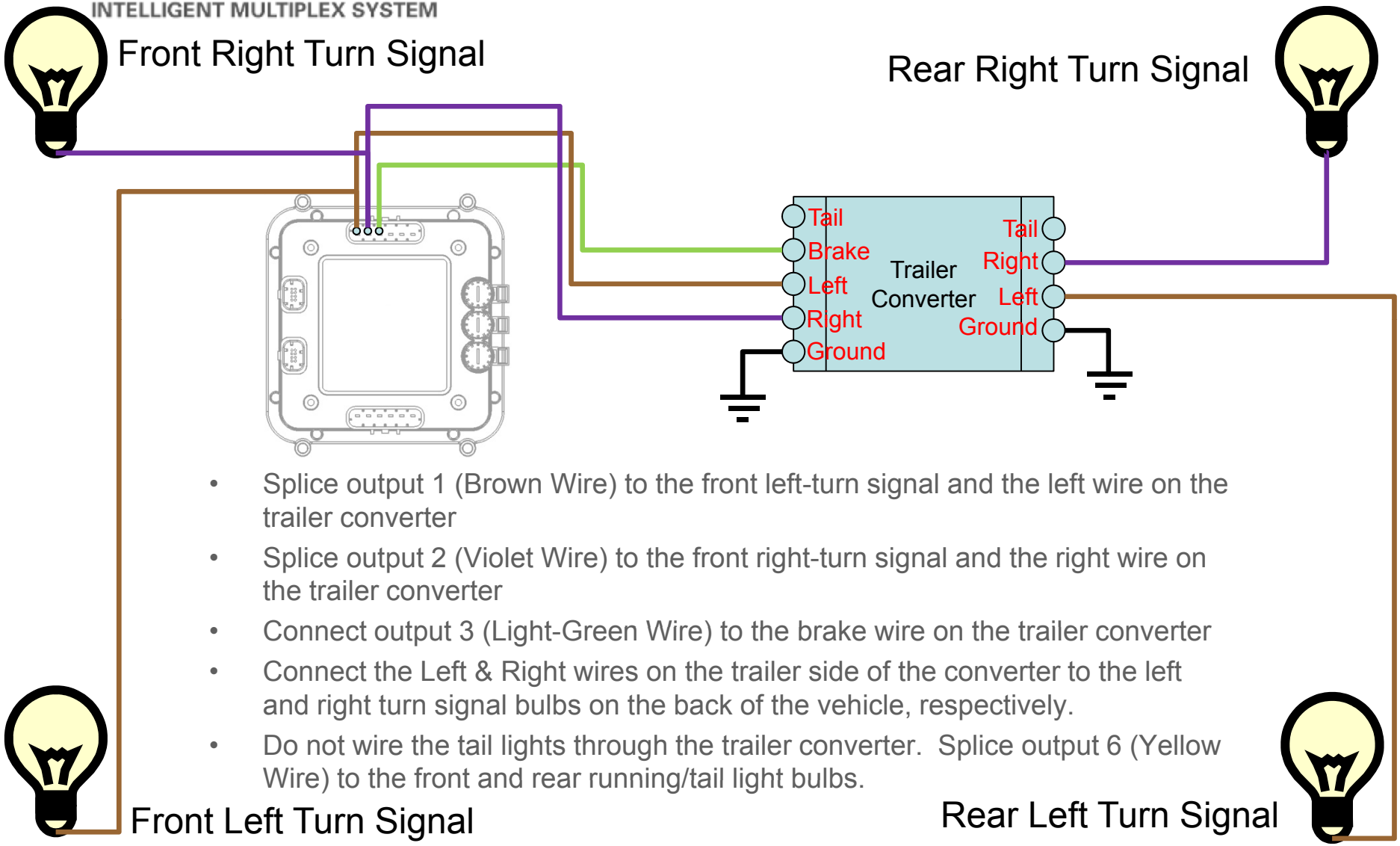

- Splice output 1 (Brown Wire) to the front left-turn signal and the left wire on the trailer converter
- Splice output 2 (Violet Wire) to the front right-turn signal and the right wire on the trailer converter
- Connect output 3 (Light-Green Wire) to the brake wire on the trailer converter
- Connect the Left & Right wires on the trailer side of the converter to the left and right turn signal bulbs on the back of the vehicle, respectively.
- Do not wire the tail lights through the trailer converter. Splice output 6 (Yellow Wire) to the front and rear running/tail light bulbs.

© Infinitybox, LLC. 2011 All Right Reserved