1994 Mustang GT

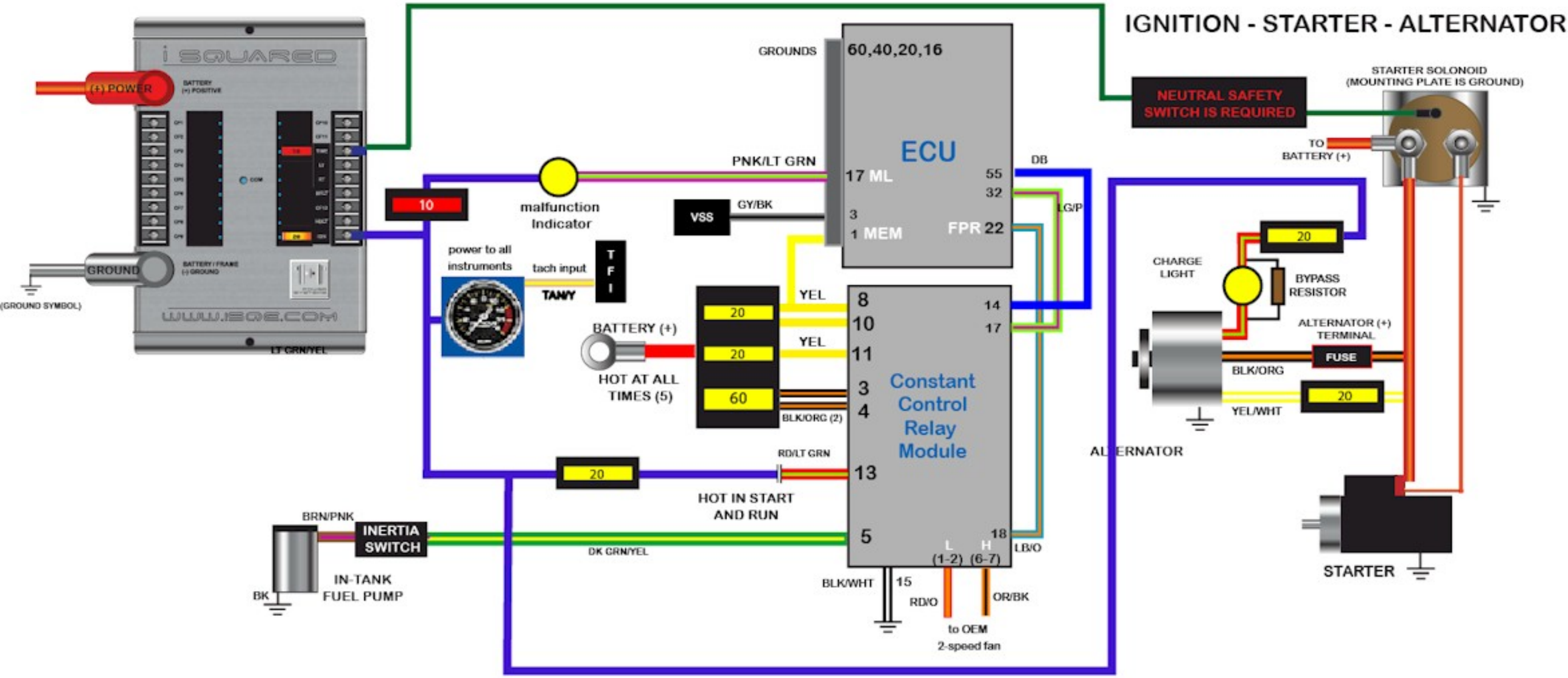

BE SURE THAT EACH LOAD IS PROPERLY GROUNDED TO THE CHASSIS OR METAL PORTION OF BODY