1998 - DOHC 4.6 Modular (PATS Deleted)

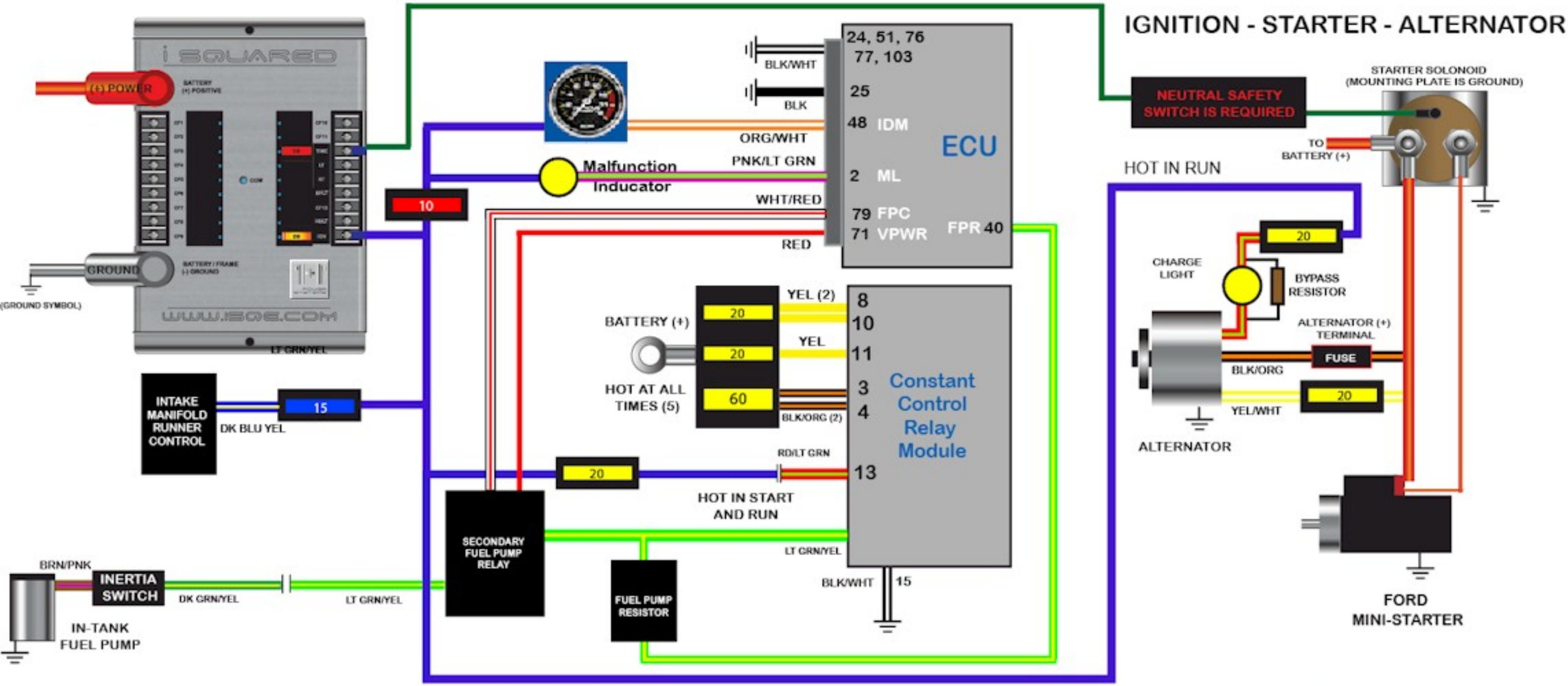

BE SURE THAT EACH LOAD IS PROPERLY GROUNDED TO THE CHASSIS OR METAL PORTION OF BODY