POWER CONTROLLER - Attaching Loads STEP 7 - Speed Density System

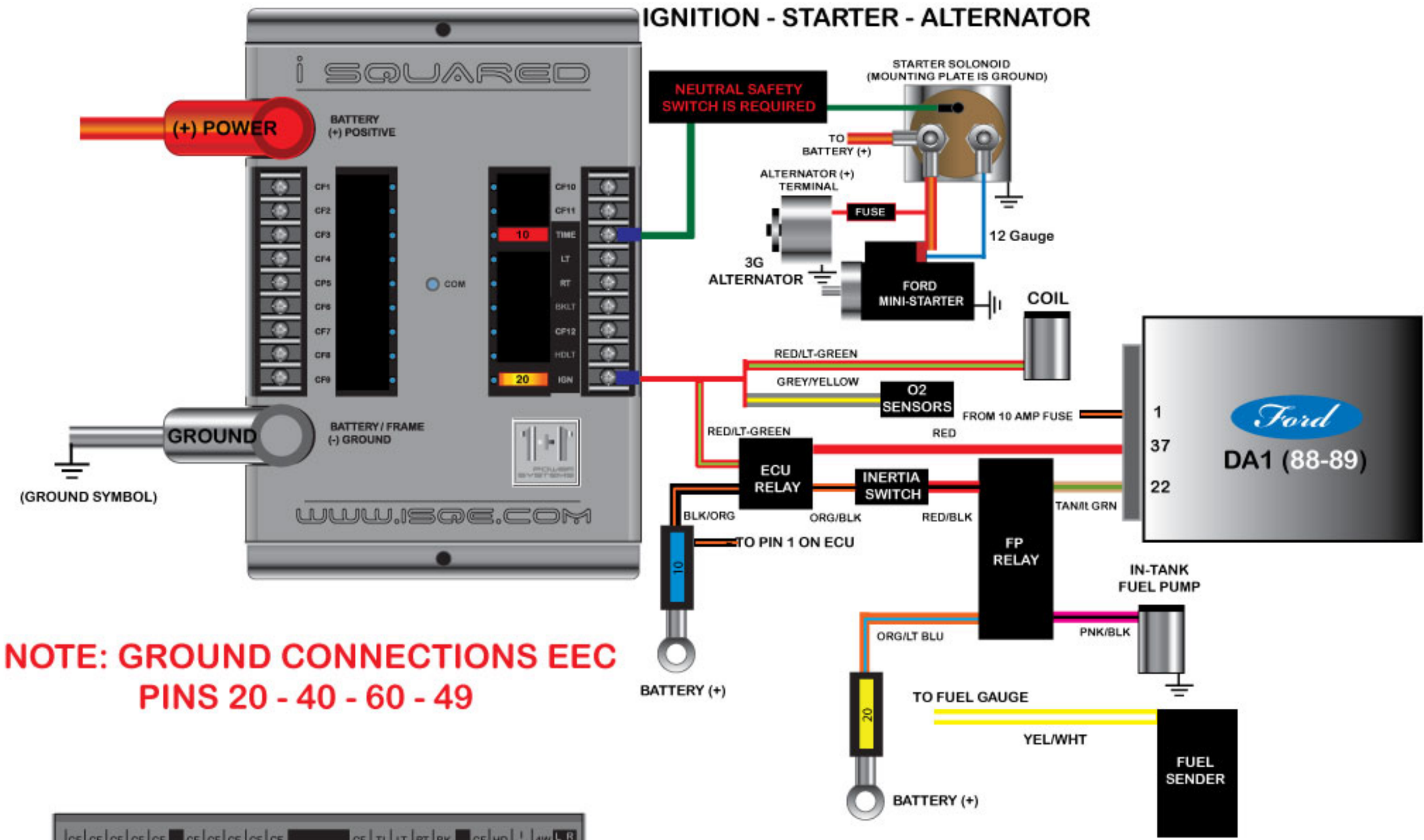

NOTE: GROUND CONNECTIONS EEC
PINS 20 - 40 - 60 - 49

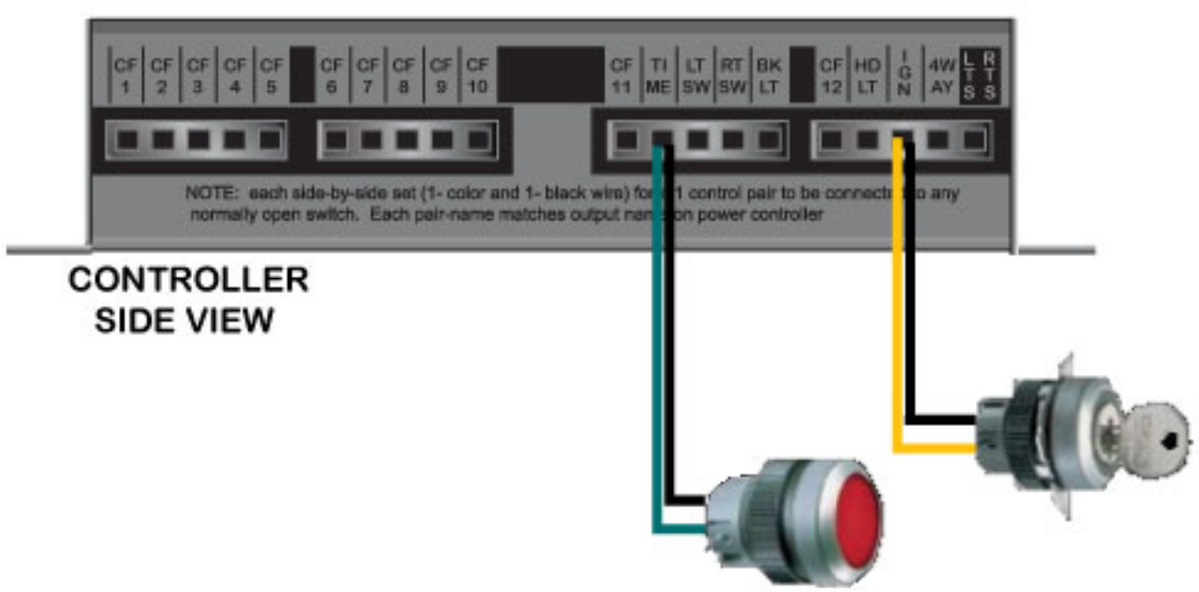

BE SURE THAT EACH LOAD IS PROPERLY GROUNDED TO THE CHASSIS OR METAL PORTION OF BODY